External view

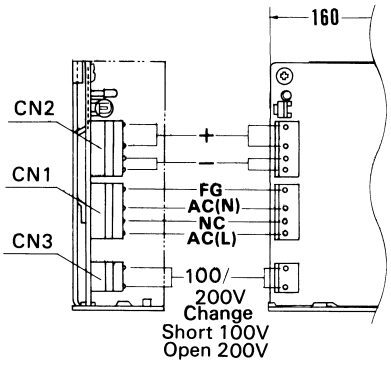

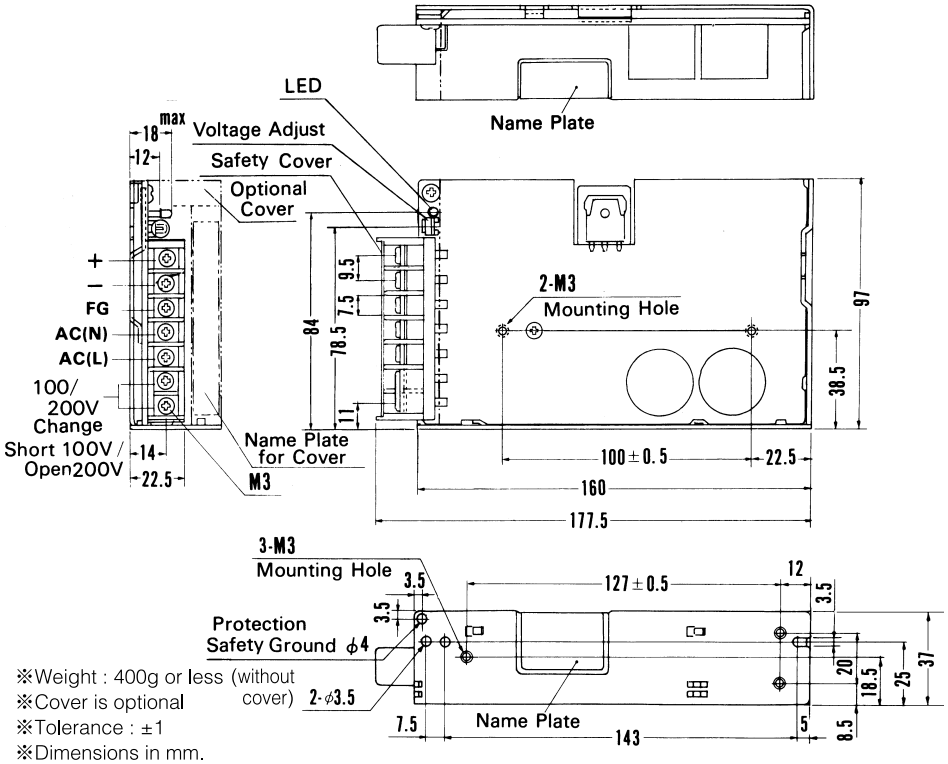

I/O Connector		Mating Connector	Terminal
CN1	5289-4A	5199-04	Chain: 5194PBT
			Loose: 5194PBTL
CN2	5277-4A	5196-04	Chain: 5194PBT
			Loose: 5194PBTL
CN3	5289-2A	5199-02	Chain: 5194PBT
			Loose: 5194PBTL

※Maximum 5A per pin of CN2 can be applied. (Mfr : Molex)

Connector type

※Weight : 400g or less (without cover)
※Cover is optional
※Tolerance : ±1
※Dimensions in mm.

Barrier strip type

※Mounting torque:0.49N·m (5.0kgf·cm) max

Performance data

■STATIC CHARACTERISTICS (P50E-5)

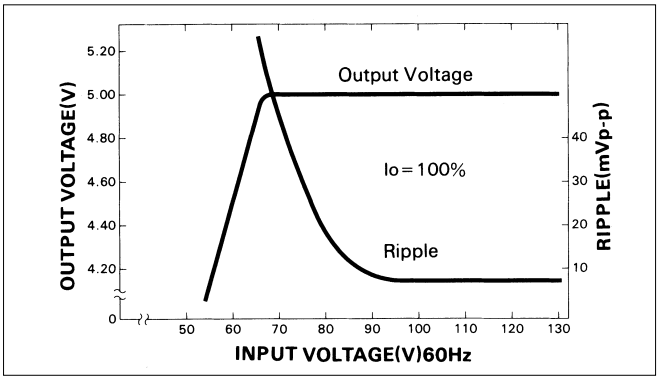

■RISE TIME & FALL TIME (P50E-5)

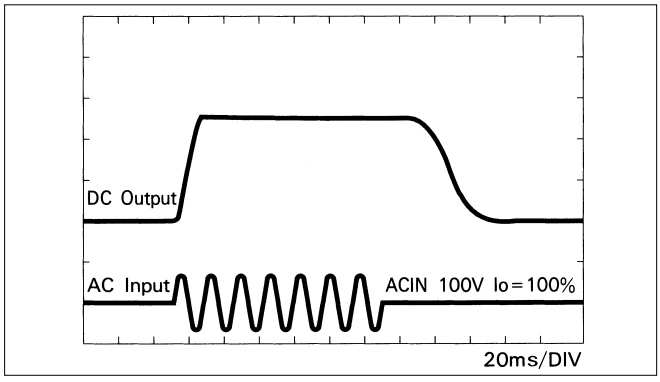

■OVERCURRENT CHARACTERISTICS (P50E-5)

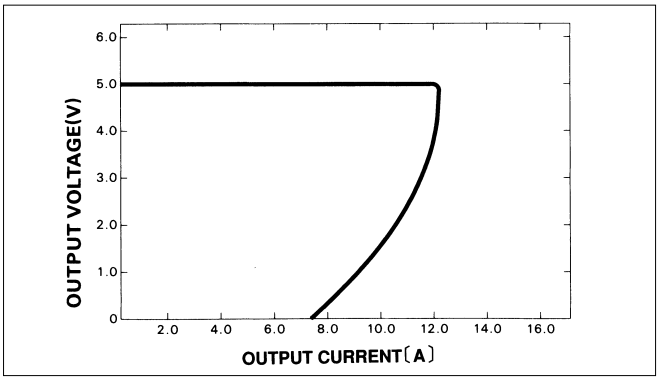
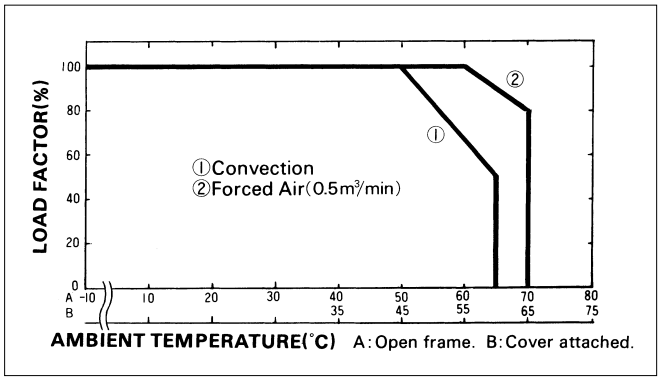
■DERATING CURVE